Model | BD103

The Ando Lighting LED Bollard Series combines modern architectural design with exceptional lighting performance, durability, and efficiency. Designed to deliver uniform illumination with a clean, contemporary aesthetic, these fixtures offer high luminous efficacy, long service life, and easy installation.

Constructed from one-piece die-cast aluminum, each bollard features a UV-resistant powder-coated finish for superior corrosion resistance and long-lasting performance in outdoor environments.

Available with multiple light output options to accommodate a variety of applications, the series provides reliable illumination for pathways, walkways, gardens, courtyards, and commercial landscapes.

Ideal for retail centers, office complexes, industrial parks, schools, universities, public transit facilities, airports, and healthcare campuses, Ando Lighting bollards deliver a refined balance of architectural aesthetics, functionality, and durability.

Product Features:

- High-efficiency LED driver with universal 120–277VAC input voltage.
- Energy-efficient LED technology delivering up to 3,485 lumens.
- Durable, one-piece die-cast aluminum housing with powder-coated finish.
- Precision-engineered optical system with clear polycarbonate lens.
- Field-selectable wattage: 14W, 19W, or 24W.
- Field-selectable color temperature: 3000K, 4000K, or 5000K.
- Integrated photocell with selectable ON/OFF control.
- Factory-preset wattage and color temperature to match the ordered configuration.
- IP65-rated construction suitable for outdoor wet locations.
- 0–10V dimming capability.
- Rated LED life exceeding 50,000 hours.
- Optional 90-minute emergency battery backup.
- UL Certified and DLC Premium Listed.
- 5-Year Limited Warranty.

COLOR OPTIONS: BLACK (-B) BRONZE (-BZ) WHITE (-W)

CUSTOM COLORS ARE AVAILABLE

FACTORY 5 YEAR WARRANTY

DLC LISTED PREMIUM

UL CERTIFIED

SPECIFICATION

MODEL		BD103-LB14-3K	BD103-LB14-4K	BD103-LB14-5K	BD103-LB19-3K	BD103-LB19-4K	BD103-LB19-5K	BD103-LB24-3K	BD103-LB24-4K	BD103-LB24-5K
WATTAGE	Field Selectable	14W	14W	14W	19W	19W	19W	24W	24W	24W
CCT	Field Selectable	3000K	4000K	5000K	3000K	4000K	5000K	3000K	4000K	5000K
LUMEN OUTPUT		2161	2274	2315	2925	3103	3127	3302	3485	3296
CRI		Ra>70								
INPUT VOLTAGE		AC120-277V								
BEAM ANGLE		151°								
OPERATING TEMPERATURE		-4°F ~113°F								
STORAGE TEMPERATURE		-22°F to 176°F								
PF		> 0.9								
DRIVER EFFICIENCY		> 90%								
PROTECTION LEVEL		WET								
RATED LIFE		>50000 hours								
WARRANTY		5-Year Limited Warranty								

Factory preset to ordered wattage and CCT. Field-adjustable settings available via integrated DIP switches.

Model | BD103

ORDERING GUIDE:

EXAMPLE: BD103-LB24-5K-BZ-PH-EM

BD 103	-	LB24	-	5K	-	BZ	-	PH	-	EM
PRODUCT		POWER		CCT		FINISH		CONTROL		BATTERY BACKUP
Bollard Light		LB14 (14W) LB19 (19W) LB24 (24W)		3K (3000K) 4K (4000K) 5K (5000K)		-B (Black) -BZ (Bronze) -W (White)		PH = Photocell on Blank = Photocell off		EM = 90min Battery

DIMENSION:

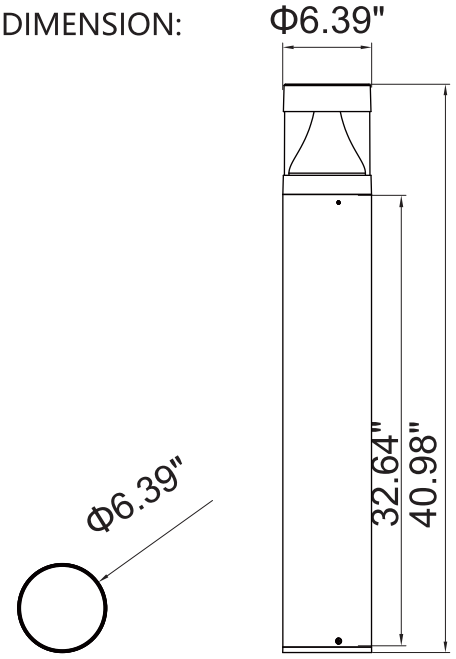

Fixture Weight

10.20Lbs

Packaged Weight

11.70Lbs

Box Size

L43.15"xW8.03"xH8.15"

Mounting Hardware Included

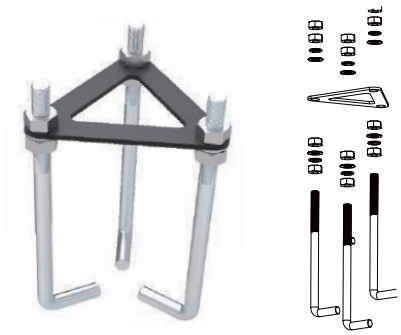

Optional Accessories(Sold Separately)

Emergency driver

Color Temperature, Wattage And Photocell Selectable

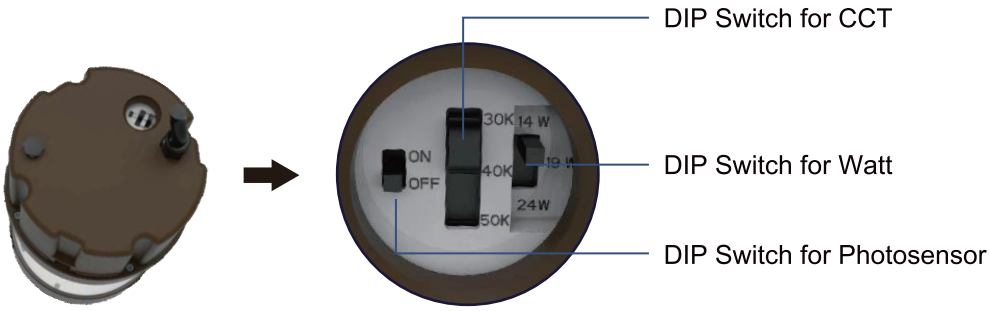

Model | BD103

PHOTOMETRICS:

For complete IES files, please visit our website.

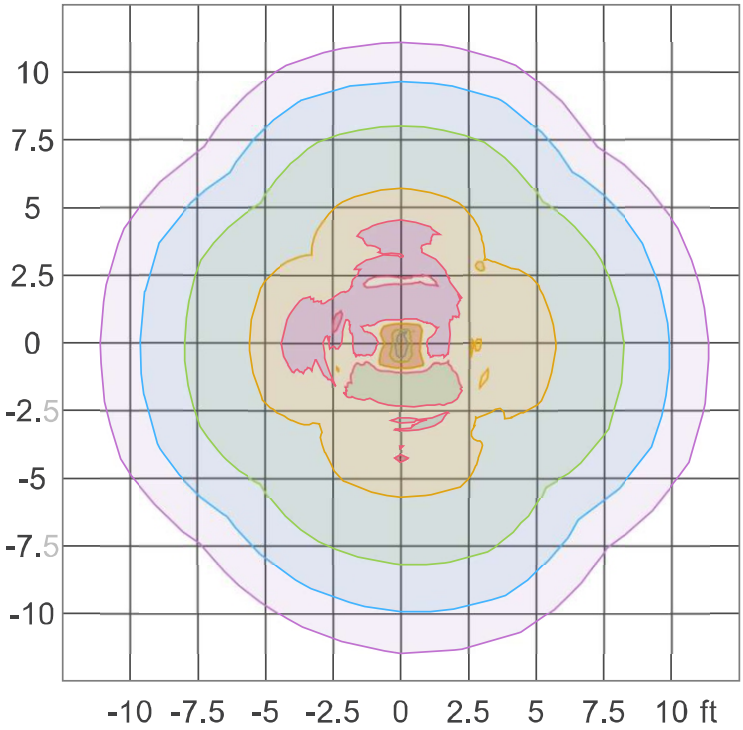

50.0 %	17.9 fc
30.0 %	10.8 fc
10.0 %	3.59 fc
5.0 %	1.79 fc
3.0 %	1.08 fc

Photometric distribution shown:
Model **BD103-LB24-5K**
24W / 5000K
Mounting height 3.3 ft.

Peak illuminance: 35.9 fc

Number of c-planes: 16

Warning:

- ⚠ Risk of fire or electric shock. Fixture installation requires knowledge of luminaires electrical systems. If not qualified, DO NOT attempt installation. Contact a qualified electrician.
- ⚠ Risk of fire or electric shock. Suitable for wet locations. Always turn off the power supply before installation.
- ⚠ Risk of fire or electric shock. Suitable for non-insulated surface and frame. DO NOT cover fixture with insulation liner or similar material.
- ⚠ DO NOT install fixture on unstable, loose or easily breakable surface.
- ⚠ DO NOT exert force on the surface of the fixture.

Note:

1. The installation and maintenance must be completed by electricians or professionals.
2. Please cut off the power before installation and maintenance.
3. The thermally insulating material is not allowed to cover the fixture.
4. Please keep away from the corrosive substance, and keep the fixture dry and clean.
5. Working temperature: -4°F~113°F, storage temperature: -22°F~176°F.