ARCHITECTURAL OUTDOOR BOLLARD

D500

WALKWAY · DRIVEWAY · ENTRANCE AREA BOLLARD

Architectural steel bollard

The D500 is an architectural outdoor bollard built for walkways, driveways, and entrance areas. Steel construction and a luminous head provide comfortable path lighting with low-maintenance service.

45.50"	11.00"	Steel	Wet Location	Surface Mount
OVERALL HEIGHT	MAX WIDTH	BODY MATERIAL	UL APPROVED	MOUNTING TYPE

BUILT FOR BEAUTIFUL SPACES

FIXTURE DETAIL

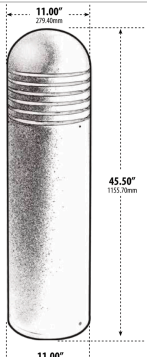

FRONT ELEVATION · 45.50"

Construction

Steel body.

Luminous head with heat-resistant polycarbonate lens.

Finishes

- Black (-B)
- Bronze (-BZ)
- Verde Green (-VG)

Electrical

Available voltages: 120V-277V, 120V, 86V-265V.

Integral LED driver on LED configurations.

No-lamp versions accept the listed lamp base.

Light sources

Lamp bases: G24, E26, GU24.

LED source included on LED configurations.

RGBW configuration uses a dedicated remote, sold separately.

Installation

Surface mount.

Use the manufacturer template and anchor pattern shown.

Listing

UL Approved for Wet Location

TYPICAL APPLICATIONS

Pedestrian Paths · Walkways · Driveways · Entrance Areas · Commercial Landscape · Residential

Technical presentation prepared by Projekt Supply. © 2026 Projekt Supply. Specifications subject to change.

MODEL MATRIX AND SPECIFICATION DATA

Ordering / Configuration Matrix

Use the exact model number shown below when specifying or ordering.

Model number	Illuminant	Base	Wattage	Voltage	CCT	Lumens	Lamp
D500	Incandescent	E26	60W (MAX)	**120V-277V**	N/A	—	No
D500-L6-30K	LED	E26	6W	120V	30K	**480**	Yes
D500-L6-60K	LED	E26	6W	120V	60K	**480**	Yes
D500-L6-RGBW	LED	E26	6W	**86V-265V**	RGBW	**550**	Yes
D500-L9-27K	LED	GU24	9W	120V	27K	**550**	Yes
D500-L9-40K	LED	GU24	9W	120V	40K	**800**	Yes
D500-L12-30K	LED	G24	12W	**120V-277V**	30K	**1200**	Yes
D500-L12-40K	LED	G24	12W	**120V-277V**	40K	**1225**	Yes
D500-L12-50K	LED	G24	12W	**120V-277V**	50K	**1250**	Yes
D500-L20-30K	LED	G24	20W	**120V-277V**	30K	**2400**	Yes
D500-L20-50K	LED	G24	20W	**120V-277V**	50K	**2400**	Yes

Lumens shown are nominal lamp output values provided for the listed D500 configurations.

Finish suffix. Add -B for Black or -BZ for Bronze or -VG for Verde Green to complete the model number.
Example complete SKU: D500-L20-50K-B = 20W / 50K / Black

Black (-B)
Bronze (-BZ)
Verde Green (-VG)

Physical

Overall dimensions	11.00" W × 45.50" H × 11.00" D
Maximum height	45.50"
Width	11.00"
Maximum depth	11.00"

Material / Listing

Body material	Steel
Available finishes	Black, Bronze, Verde Green
Listing	UL Approved for Wet Location
Mounting	Surface Mount

Optical / Application notes

- Confirm glare/uplight suitability for dark-sky-sensitive projects.
- Consult Projekt Supply for lamp-specific performance/IES data.

RGBW remote control

D500 RGBW · remote sold separately

4-ZONE
P-RMT-MR16-LED-4W-MC
~100 ft / 30 m

8-ZONE
P-RMT-LED-8ZONE-MC
~100 ft / 30 m

2.4 GHz RF

MOUNTING AND INSTALLATION DIMENSIONS

Mounting / Installation Details

Dimensions shown in inches; metric equivalents shown where supplied by manufacturer.

BASE PATTERN

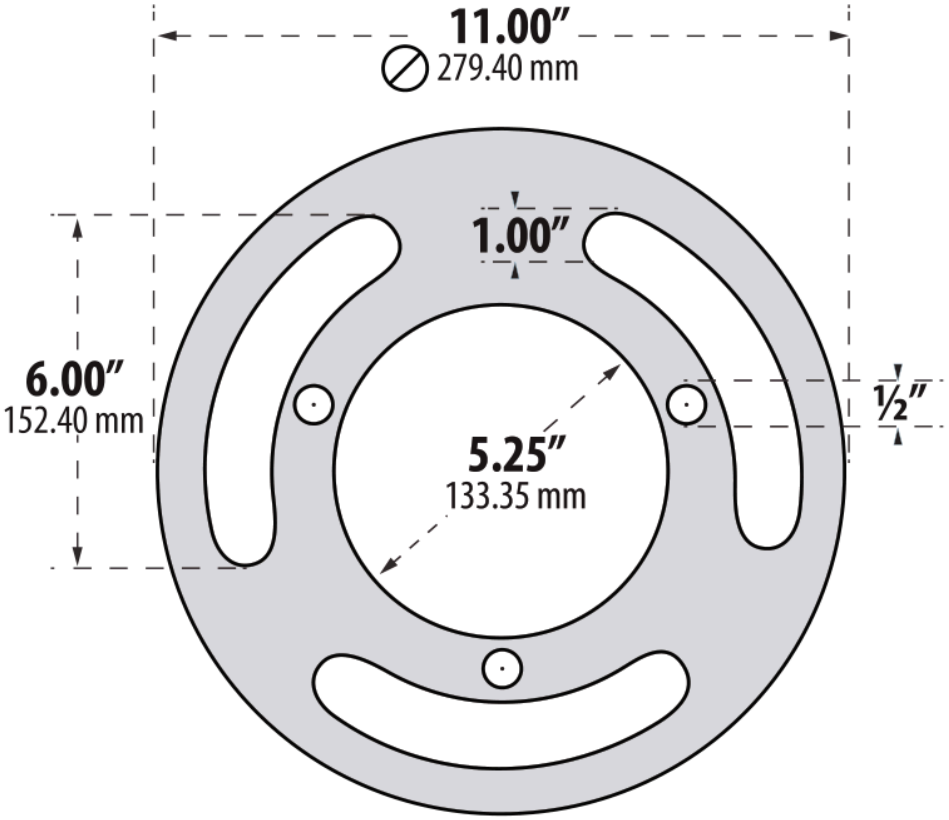

Mounting hardware not included

Installation notes

- Surface mount.
- Use the manufacturer template and anchor pattern shown.
- Confirm mounting hardware with the current manufacturer kit.
- Field wiring and anchorage to comply with local code.
- Verify substrate and site conditions before installation.

Warranty

Steel: 3 years from date of shipment.
LED: refer to current manufacturer lamp warranty and performance data.

Manufacturer

Dabmar Lighting Incorporated
320 Graves Ave · Oxnard, CA 93030
805.604.9090 · f: 805.604.9050
www.dabmar.com
4693 19th Street Ct E, Bradenton, FL 34203